SKF

Linear Motion

SKF Roller Screw Jack Actuator

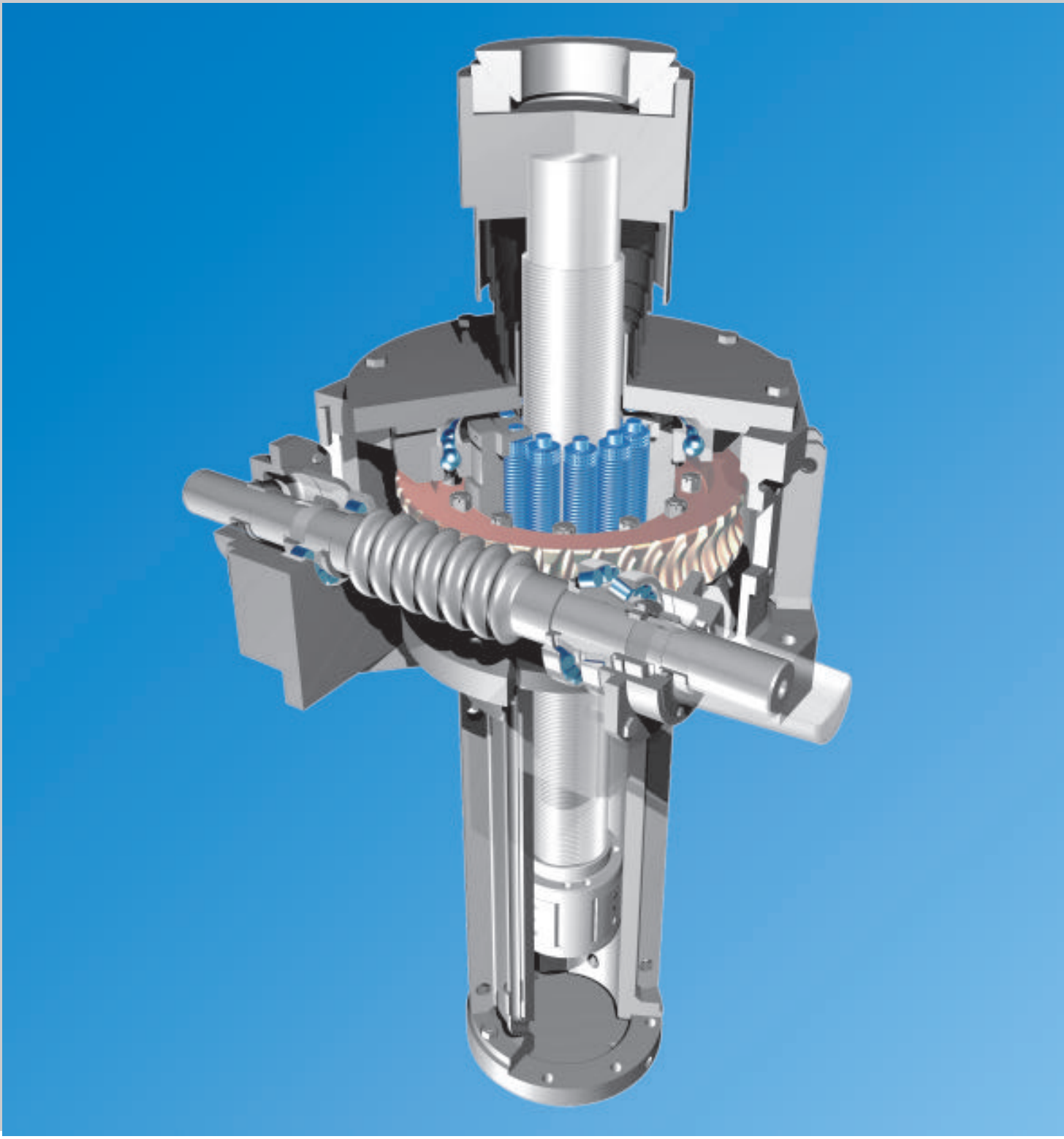

Roller Screw Jack Actuators

SKF Roller Screw Jack Actuators (RSJA) employ a SKF spherical roller thrust bearing which support a roller screw nut. By using rollers as rolling elements the system permits lowering and raising of heavy loads with high efficiency and high reliability.

It provides an overall efficiency as high as 70% in some models depending on the ratio of the worm gear set.

Description of the mechanism

Actuator

The design of the screw jack is based on the principle of the turning nut. A worm gear drives the rotating nut. The gear and screw system is guided by a bronze ring and two bearings, a ball bearing and spherical thrust bearing in order to maintain an even load distribution. The load carrying capacity of the screw jack depends on the size of the roller screw. (This design only permits a load in compression). The steel welded gearbox is robust. A solid tube extending from the base, is used for guiding the screw shaft and its antirotation. Two tubes are inserted around this shaft to facilitate oil splash lubrication, which is essential when operating non stop in the steel industry. The bottom of the gearbox can be spherical if desired, thus improving screwjack alignment during assembly. The top link between the jack and surrouding frame is also spherically joined. Additional protection for the screw is provided by telescopic metal bellows ; Kevlar bellows are available on request.

Roller screw design

The design is such that the threading of the screw rollers and nut permit a planetary motion of the rollers; this unique feature does not require any means for recirculating the rolling elements supressing the potential risk of failure of the recirculation. The diameter of the 3 basic elements (screw, rollers and nut) are chosen in such a manner that the rollers when they freely roll inside the nut, follow a planetary path and do not move axially. The profile of the screw shaft and the nut thread is a triangular profile with an angle of 90 degrees.

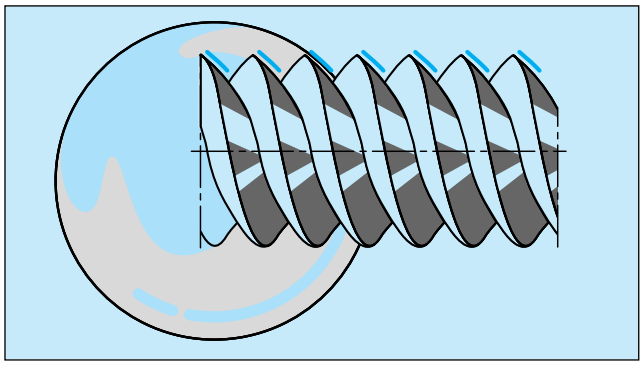

The profile of the roller thread is also 90° and its flanks are barrelled to give a large equivalent ball diameter.

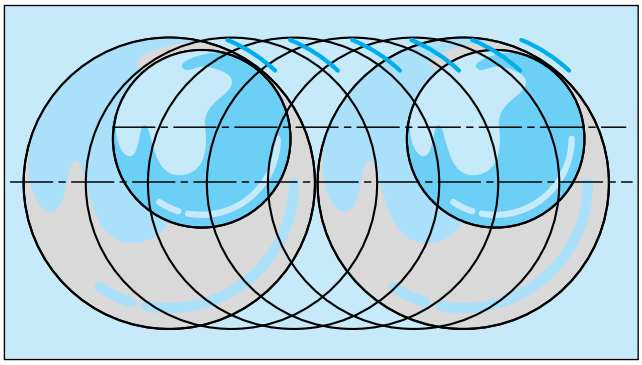

Within one lead of the thread of the screw shaft there are as many contact surfaces as there are starts of thread on the screw shaft.

The shape and number of contact points permit a high load carrying capacity to be achieved. Roller screws have a load carrying capacity about 3 times larger than the average ball screw carrying capacity.

Performances

As example with an average speed of 1,5 m/min and an operating time of 2 000 hours:

a dynamic carrying capacity of →	will be lifted by a roller screw of
25 tons	diameter 75 mm.
45 tons	diameter 99 mm.
50 tons	diameter 120 mm.
70 tons	diameter 150 mm.
90 tons	diameter 180 mm.

Main benefits :

- Move loads and apply forces more efficiently and more reliably than all other types of mechanical actuator
- Permit faster operation and longer travel under high load
- Require less power
- Transmit high power without overheating
- Ensure correct functioning even in adverse environments such as dirt or poor lubrication
- Robust design to withstand shock loads.

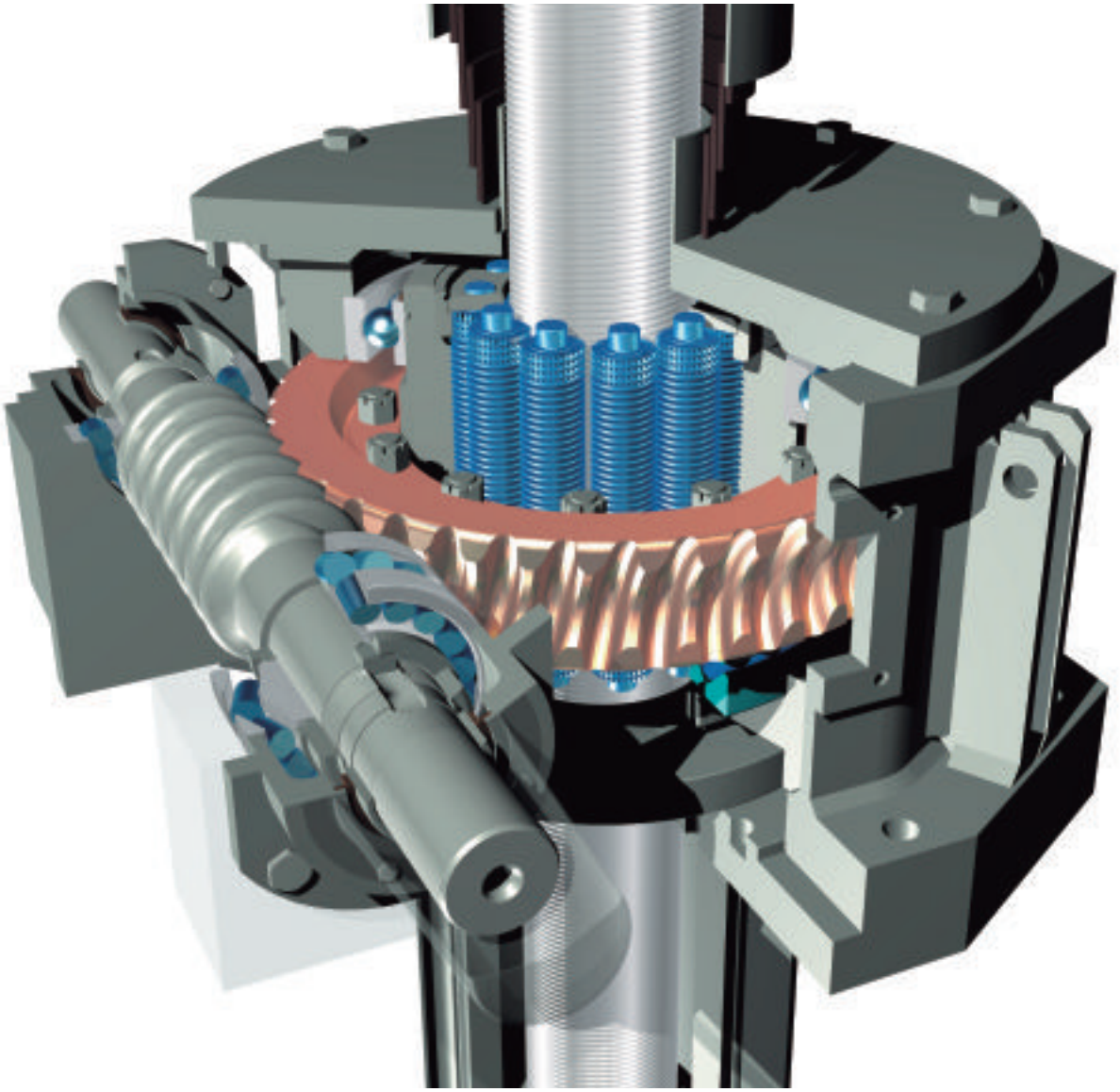

Experience :

Through twenty five years of partnership with the global steel industry, SKF has continuously improved the art of linear actuation in this demanding of environment, using the unique features of SKF roller screw - based jack actuators.

More than 60 continuous steel casting machines, in 23 countries have been operating without roller screw failures. The average life of all these screws is over 12 years, the oldest in service having exceeded 22 years so far.